TOPSPAN®

DESIGN AND INSTALLATION GUIDE FOR BUILDING PROFESSIONALS

CONTENTS

Introduction	2
TOPSPAN® Range	3
TOPSPAN® 22	4
TOPSPAN® 40	5
TOPSPAN® 61	6
TOPSPAN® 96	8
TOPSPAN® 120	10
Section Properties	12
Fixing Details	13
Fastener Specification	14
General Information and Installation Matters	15
Storage and Handling	18
Reference Documents	19

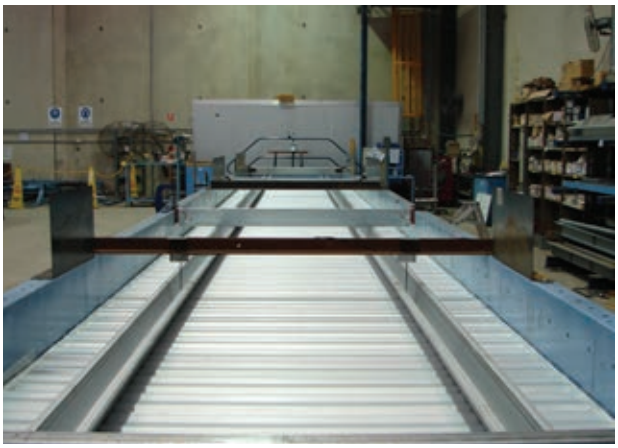

Inward test of TOPSPAN® on pressure test rig.

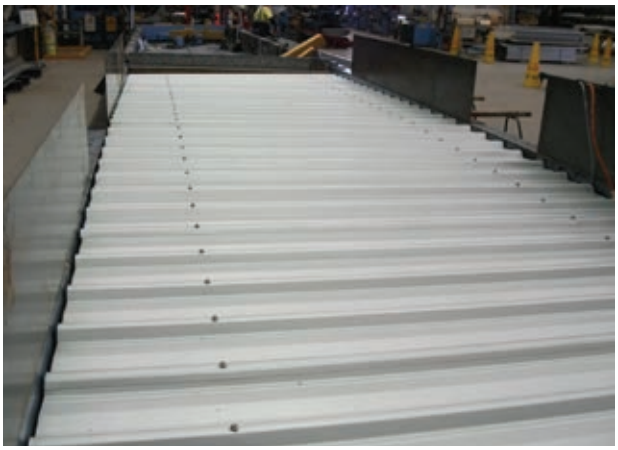

Outward test of TOPSPAN® on pressure test rig.

INTRODUCTION

TOPSPAN® DESIGN ADVANTAGES

LYSAGHT TOPSPAN® has been used in the building and construction industry for many decades in commercial and residential applications. Applications include sheds, garages, carports, and as ceiling and roof battens as well as for racking, fencing and handyman projects. There's a TOPSPAN® profile that's right for your next job.

Features and benefits of TOPSPAN® profiles:

- Versatile TOPSPAN® profiles are an economical, lightweight steel alternative to timber battens or the smaller light gauge purlins
- TOPSPAN® is quick and easy to install because they can be lapped, eliminating the time-consuming process of cutting to length.
- Consistent straightness simplifies alignment
- Lightweight – for easy handling and minimal labour
- Ease of installation – easy fixing with self-drilling screws through the bottom flanges with simple, fast lapping direct to supports without the need for cleats
- Stability during installation – directly laid on top of supports with no added support method or labour required
- TOPSPAN®'s compact bundles are easily stacked, stored and transported

TOPSPAN® sections will perform as specified if design, fabrication and fixing are in accordance with our recommendations and good trade practice.

The TOPSPAN® capacities given in this publication have been generated from a comprehensive full-scale testing program conducted at the LYSAGHT® Research & Technology NATA-accredited testing facility. The testing also provided a thorough understanding of the real-life behaviour of the TOPSPAN® profiles under load.

The performance of the TOPSPAN® profiles is backed by Lysaght, with over 150 years experience in building products, thus assuring quality and consistency in product profile and straightness.

Roll-formed from quality high-tensile Australian steel, TOPSPAN® is coated for corrosion-free long life. It is 100% recyclable, and it won't warp, twist, splinter, rot and won't be attacked by termites. The material will not ignite, spread flame or smoke and thus is non-combustible.

NON-CYCLONIC AREAS

The information in this brochure is suitable for use only in areas where a tropical cyclone is unlikely to occur as defined in AS 1170.2:2011, Wind Loads. Refer to our Cyclonic Area Design Manual for advice on designs to be used in cyclonic areas.

TOPSPAN® RANGE

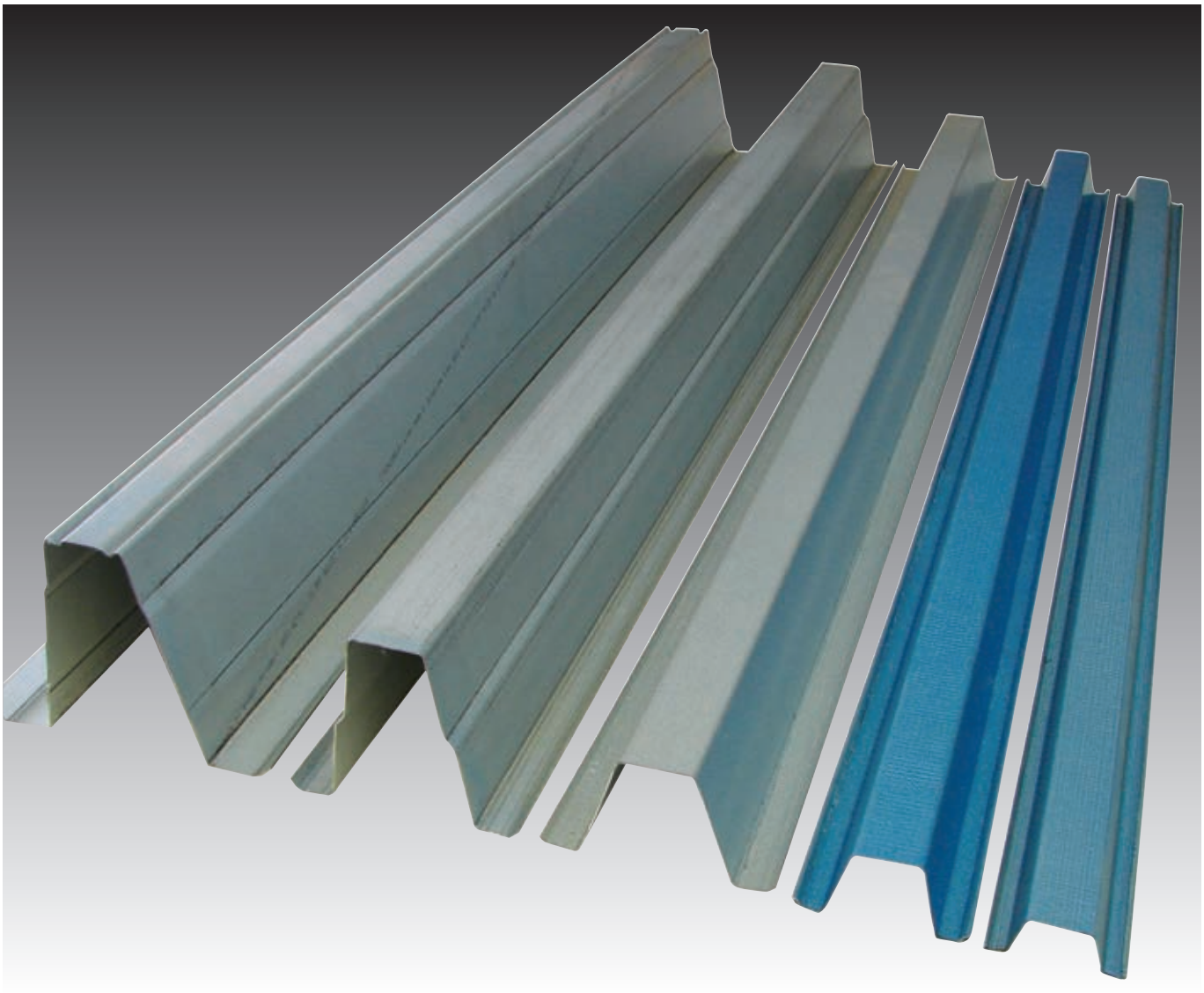

TOPSPAN® SECTIONS

TOPSPAN® 120	TOPSPAN® 96	TOPSPAN® 61	TOPSPAN® 40	TOPSPAN® 22
0.70mm BMT	0.75mm BMT	0.60mm BMT	0.48mm BMT*	0.42mm BMT
0.90mm BMT	1.00mm BMT	0.75mm BMT	0.55mm BMT	
1.00mm BMT	1.20mm BMT	1.00mm BMT	0.75mm BMT	
		1.20mm BMT		

*Victoria only

KEY TO PRODUCT IDENTIFICATION

TS2242	TOPSPAN® 22, 0.42mm BMT
TS4048	TOPSPAN® 40, 0.48mm BMT
TS4055	TOPSPAN® 40, 0.55mm BMT
TS4075	TOPSPAN® 40, 0.75mm BMT
TS6160	TOPSPAN® 61, 0.60mm BMT#
TS6175	TOPSPAN® 61, 0.75mm BMT
TS6110	TOPSPAN® 61, 1.0mm BMT
TS6112	TOPSPAN® 61, 1.2mm BMT
TS9675	TOPSPAN® 96, 0.75mm BMT
TS9610	TOPSPAN® 96, 1.0mm BMT
TS9612	TOPSPAN® 96, 1.2mm BMT
TS12070	TOPSPAN® 120, 0.70mm BMT
TS12090	TOPSPAN® 120, 0.90mm BMT
TS12010	TOPSPAN® 120, 1.0mm BMT#

Consult your local LYSAGHT® price list for product availability.
Availability is subject to enquiry.

TOPSPAN® 22

LIGHT, STRONG, ECONOMICAL

TOPSPAN® 22 steel ceiling battens are versatile and easy to use, providing strength, lightness and rigidity with low cost.

TOPSPAN® 22 is a 22mm deep profile used as a ceiling batten for internal fixing of ceiling and wall liner. It is compatible with all popular domestic plasterboards. It is commonly called a "ceiling batten".

The top flange of the profile has an embossed surface to make it easier for the plasterboard screws to grip and 'bite-in" without slippage during awkward installation positioning.

The lips of the bottom flanges are rounded for improved safety during handling and installation by the plasterboard trades.

Nominal lapping (non-structural) is simple and will ensure continuity and straightness of fastener alignment.

INWARD CAPACITY

3-Span Continuous - Inward Capacity (kN/m)

	TS2242	
Span (mm)	**Strength**	**L/500**
450	7.36	0.84
600	4.42	0.76
900	2.08	0.62
1200	1.20	0.37

OUTWARD CAPACITY

3-Span Continuous - Outward Capacity (kN/m)

Span (mm)	**Member Strength (kN/m)**	**2 Screw Connection Capacity (kN/m)**	
	TS2242	**Support Thickness (mm)**	
		0.75	**1.0**
450	7.34	3.13	5.29
600	4.40	2.35	3.96
900	2.06	1.56	2.64
1200	0.97	1.17	1.98

Capacities for softwood and hardwood.

Notes:

1. Refer to General Notes for Capacity Table notes.
2. Do not walk on battens.
3. Refer to tables on page 14 for Fastener Specifications.

MATERIAL SPECIFICATIONS

TOPSPAN® 22 ceiling battens are made from TRUECORE® steel (aluminium/zinc alloy coated) complying with AS 1397 G550, AM150 (550 MPa minimum yield stress, 150g/m^2 minimum coating mass).

Base Metal Thickness (mm)	0.42
Yield Strength (MPa)	550
Coating Mass (g/m^2)	150
Mass (kg/m)	0.35

TOPSPAN® 40

TOPSPAN® 40 is a 40mm deep profile used as a roofing batten for residential tiled roof or steel roof. It is commonly called a "roofing batten", however it can also be used in walling applications.

The top flange of the profile has an embossed surface to make it easier for the steel roofing screws to grip and "bite-in" without slippage during awkward and steep installation angles (up to 25 degrees). Furthermore the embossment improves the slip resistance when the roofers are walking up the roof structure during the placement of the roof tiles or steel roofing.

The lips of the bottom flanges are rounded for improved safety during handling and installation by the tiler trades.

The ends of each length are mitre cut for simple installation at hip and valleys.

Nominal lapping (non-structural) is simple and will ensure continuity and straightness of fastener alignment.

MAXIMUM SPAN (MM)

Point Load: 1.1kN (strength criteria only)

Section	TS4048	TS4055	TS4075
3-Span Continuous	900	1200	1800

Notes:
1. Refer to General Notes for Capacity Table notes.
2. Inward Capacity Tables can also be used for tile applications.
3. Refer to tables on page 14 for Fastener Specifications.
4. TOPSPAN® 4048 is only available in Victoria.

MATERIAL SPECIFICATIONS

TOPSPAN® 40 roofing battens are made from TRUECORE® steel (aluminium/zinc alloy coated) complying with AS 1397 G550 — AM150 (550 MPa minimum yield stress, 150g/m^2 minimum coating mass).

Base Metal Thickness (mm)	0.48	0.55	0.75
Yield Strength (MPa)	550	550	550
Coating Mass (g/m^2)	150	150	150
Mass (kg/m)	0.60	0.67	0.91

INWARD CAPACITY

3-Span Continuous - Inward Capacity (kN/m)

	TS4048		TS4055		TS4075	
Span (mm)	**Strength**	**L/300**	**Strength**	**L/300**	**Strength**	**L/300**
600	6.91	2.58	8.46	2.77	15.24	2.97
900	3.98	1.59	4.46	1.71	6.95	1.98
1200	2.41	0.84	2.49	0.88	4.05	1.24
1500	1.55	0.47	1.63	0.48	2.65	0.66
1800	1.13	0.28	1.15	0.29	1.86	0.40
2000	0.89	0.25	0.94	0.22	1.51	0.30

OUTWARD CAPACITY

3-Span Continuous - Outward Capacity (kN/m)

Span (mm)	Member Strength (kN/m)			2 Screw Connection Capacity (kN/m)				4 Screw Connection Capacity (kN/m)	
	TS4048	**TS4055**	**TS4075**	**Support Thickness (mm)**				**Support Thickness (mm)**	
				0.75	**1.0**	**1.2**	**1.5**	**0.75**	**1.0**
600	7.66	8.60	11.18	2.35	3.96	6.11	6.84	3.48	6.27
900	3.43	3.83	6.73	1.56	2.64	4.07	4.56	2.32	4.18
1200	1.92	2.18	3.79	1.17	1.98	3.05	3.42	1.74	3.14
1500	1.25	1.41	2.44	0.94	1.59	2.44	2.73	1.39	2.51
1800	0.87	0.98	1.70	0.78	1.32	2.04	2.28	1.16	2.09
2000	0.71	0.80	1.38	0.70	1.19	1.83	2.05	1.05	1.88

Capacities for softwood and hardwood.

TOPSPAN® 61

TOPSPAN® 61 is a 61mm deep profile used in the smaller framed shed and awnings market and is a convenient size to satisfy the niche market need of a section between a small purlin and large batten.

It is popular in the residential and rural markets and has found other applications such as framing, long-span plasterboard battens, fencing and handyman applications. It is commonly called a "garage batten".

The bottom flanges have two longitudinal stiffeners/grooves for improved performance, but also act as a guide for the correct positioning of the fixing fasteners.

Lapping (structural) is simple and will ensure continuity and straightness and further improve the capacity of the configuration. The lapping results in a precise snug fit without deformation of the profile and only nominal step at the lap.

MAXIMUM SPAN (MM)

Point Load: 1.1kN (strength criteria only)

Section	TS6160	TS6175	TS6110	TS6112
Single Span	1400	2400	3600	5000
2-Span Continuous	1800	2600	4000	5000
2/3 Lapped Continuous Span	2000	2700	4200	5600

Point Load: 1.4kN (strength criteria only)

Section	TS6160	TS6175	TS6110	TS6112
Single Span	1100	1800	3000	4000
2-Span Continuous	1300	2000	3400	4500
2/3 Lapped Continuous Span	1500	2200	3500	4600

MATERIAL SPECIFICATIONS

TOPSPAN® 61 light steel sections are made from ZINCALUME® aluminium/zinc alloy coated steel complying with AS 1397 G550, AM125 (550 MPa minimum yield stress, 125g/m^2 minimum coating mass) or AS 1397 G500, AM125 (500 MPa minimum yield stress, 125g/m^2 minimum coating mass).

Base Metal Thickness (mm)	0.60	0.75	1.0	1.2
Yield Strength (MPa)	550	550	550	500
Coating Mass (g/m^2)	125	125	125	125
Mass (kg/m)	0.95	1.18	1.56	1.87

INWARD CAPACITY

2-Span Lapped - Inward Capacity (kN/m)

	TS6160		TS6175		TS6110		TS6112	
Span (mm)	Strength	L/150	Strength	L/150	Strength	L/150	Strength	L/150
1500	3.81	2.48	5.20	3.17	7.88	3.47		
2000	2.46	1.66	3.46	2.10	5.27	2.43	6.17	2.87
2500	1.45	1.04	2.13	1.28	3.30	1.60	4.70	2.10
3000	1.10	0.75	1.64	0.94	2.57	1.20	3.46	1.46
3500	0.86	0.53	1.29	0.68	2.05	0.86	2.44	0.93
4000	0.63	0.32	0.94	0.43	1.53	0.52	1.65	0.52
4500							1.43	0.43
5000							1.21	0.34
5500							0.98	0.24
6000							0.76	0.14

3-Span Lapped - Inward Capacity (kN/m)

	TS6160		TS6175		TS6110		TS6112	
Span (mm)	Strength	L/150	Strength	L/150	Strength	L/150	Strength	L/150
1500	3.47	1.95	5.57	2.46	7.96	2.73		
2000	2.24	1.32	3.60	1.65	5.32	1.91	5.79	2.26
2500	1.31	0.81	2.11	1.01	3.31	1.26	4.38	1.65
3000	0.98	0.59	1.58	0.74	2.53	0.94	3.19	1.15
3500	0.76	0.43	1.22	0.53	1.96	0.67	2.22	0.73
4000	0.54	0.25	0.86	0.34	1.39	0.42	1.47	0.42
4500							1.27	0.34
5000							1.07	0.27
5500							0.87	0.19
6000							0.67	0.11

Notes:

1. Refer to General Notes for Capacity Table notes.

2-Span Continuous - Inward Capacity (kN/m)

	TS6160		TS6175		TS6110		TS6112	
Span (mm)	Strength	L/150	Strength	L/150	Strength	L/150	Strength	L/150
1500	2.63	2.28	3.92	2.84	5.84	3.56		
2000	1.70	1.40	2.54	1.94	3.77	2.38	3.56	2.57
2500	1.00	0.95	1.51	1.24	2.21	1.46	2.28	1.49
3000	0.76	0.70	1.14	0.91	1.66	1.07	1.58	0.96
3500	0.59	0.53	0.88	0.64	1.29	0.76	1.16	0.65
4000	0.43	0.43	0.63	0.38	0.91	0.47	0.89	0.48

Single Span - Inward Capacity (kN/m)

	TS6160		TS6175		TS6110		TS6112	
Span (mm)	Strength	L/150	Strength	L/150	Strength	L/150	Strength	L/150
1500	2.14	1.98	3.43	2.50	5.52	3.10		
2000	1.37	1.13	2.22	1.39	3.55	1.77	3.56	1.64
2500	0.80	0.50	1.31	0.58	2.07	0.79	2.69	1.17
3000	0.61	0.34	0.98	0.38	1.55	0.52	1.95	0.77
3500	0.49	0.24	0.76	0.27	1.20	0.37	1.35	0.46
4000			0.54	0.17	0.85	0.22	0.89	0.22
4500							0.77	0.18
5000							0.65	0.15
5500							0.52	0.11
6000							0.40	0.07

OUTWARD CAPACITY

2-Span Lapped - Outward Capacity (kN/m)

Span (mm)	Member Strength (kN/m)				2 Screw Connection Capacity (kN/m)				4 Screw Connection Capacity (kN/m)			
	TS6160	TS6175	TS6110	TS6112	Support Thickness (mm)				Support Thickness (mm)			
					1	1.2	1.5	1.9	1	1.2	1.5	1.9
1500	3.71	4.95	7.22		1.55	2.11	2.36	3.54	2.47	2.83	3.94	4.70
2000	2.41	3.40	4.40	4.46	1.16	1.58	1.77	2.65	1.85	2.13	2.95	3.52
2500	1.44	2.21	3.22	3.59	0.93	1.26	1.42	2.12	1.48	1.70	2.36	2.82
3000	1.08	1.70	2.52	2.84	0.78	1.05	1.18	1.77	1.23	1.42	1.97	2.35
3500	0.84	1.32	2.00	2.20	0.67	0.90	1.01	1.52	1.06	1.21	1.69	2.01
4000	0.59	0.93	1.48	1.68	0.58	0.79	0.88	1.33	0.93	1.06	1.48	1.76
4500				1.45	0.52	0.70	0.79	1.18	0.82	0.94	1.31	1.57
5000				1.22	0.47	0.63	0.71	1.06	0.74	0.85	1.18	1.41
5500				0.98	0.42	0.57	0.64	0.96	0.67	0.77	1.07	1.28
6000				0.75	0.39	0.53	0.59	0.88	0.62	0.71	0.98	1.17

3-Span Lapped - Outward Capacity (kN/m)

Span (mm)	Member Strength (kN/m)				2 Screw Connection Capacity (kN/m)				4 Screw Connection Capacity (kN/m)			
	TS6160	TS6175	TS6110	TS6112	Support Thickness (mm)				Support Thickness (mm)			
					1	1.2	1.5	1.9	1	1.2	1.5	1.9
1500	3.31	4.79	6.53		1.79	2.43	2.72	4.08	2.84	3.26	4.53	5.41
2000	2.13	3.11	3.86	3.88	1.34	1.82	2.04	3.06	2.13	2.45	3.40	4.06
2500	1.24	1.85	2.59	3.06	1.07	1.46	1.63	2.45	1.71	1.96	2.72	3.24
3000	0.93	1.40	2.01	2.36	0.89	1.21	1.36	2.04	1.42	1.63	2.27	2.70
3500	0.72	1.09	1.62	1.77	0.77	1.04	1.16	1.75	1.22	1.40	1.94	2.32
4000	0.51	0.78	1.24	1.31	0.67	0.91	1.02	1.53	1.07	1.22	1.70	2.03
4500				1.14	0.60	0.81	0.91	1.36	0.95	1.09	1.51	1.80
5000				0.98	0.54	0.73	0.82	1.22	0.85	0.98	1.36	1.62
5500				0.81	0.49	0.66	0.74	1.11	0.78	0.89	1.24	1.47
6000				0.64	0.45	0.61	0.68	1.02	0.71	0.82	1.13	1.35

2-Span Continuous - Outward Capacity (kN/m)

Span (mm)	Member Strength (kN/m)				2 Screw Connection Capacity (kN/m)				4 Screw Connection Capacity (kN/m)			
	TS6160	TS6175	TS6110	TS6112	Support Thickness (mm)				Support Thickness (mm)			
					1	1.2	1.5	1.9	1	1.2	1.5	1.9
1500	3.39	4.27	5.93		1.58	2.15	2.41	3.61	2.52	2.89	4.02	4.79
2000	2.23	3.03	3.83	4.34	1.19	1.61	1.80	2.71	1.89	2.17	3.01	3.59
2500	1.35	2.06	2.25	2.97	0.95	1.29	1.44	2.17	1.51	1.73	2.41	2.87
3000	1.02	1.61	1.70	2.18	0.79	1.07	1.20	1.80	1.26	1.45	2.01	2.39
3500	0.79	1.24	1.33	1.68	0.68	0.92	1.03	1.55	1.08	1.24	1.72	2.05
4000	0.55	0.88	0.95	1.34	0.59	0.81	0.90	1.35	0.94	1.08	1.51	1.80

Single Span - Outward Capacity (kN/m)

Span (mm)	Member Strength (kN/m)				2 Screw Connection Capacity (kN/m)				4 Screw Connection Capacity (kN/m)			
	TS6160	TS6175	TS6110	TS6112	Support Thickness (mm)				Support Thickness (mm)			
					1	1.2	1.5	1.9	1	1.2	1.5	1.9
1500	1.68	2.90	3.63		3.96	5.37	6.02	9.02	6.29	7.23	10.04	11.97
2000	1.15	1.99	2.56	2.47	2.97	4.03	4.51	6.77	4.72	5.42	7.53	8.98
2500	0.75	1.28	1.74	1.96	2.38	3.22	3.61	5.41	3.78	4.34	6.02	7.18
3000	0.58	0.97	1.38	1.52	1.98	2.69	3.01	4.51	3.15	3.61	5.02	5.99
3500	0.44	0.74	1.11	1.15	1.70	2.30	2.58	3.87	2.70	3.10	4.30	5.13
4000		0.50	0.83	0.85	1.49	2.02	2.26	3.38	2.36	2.71	3.77	4.49
4500				0.75	1.32	1.79	2.01	3.01	2.10	2.41	3.35	3.99
5000				0.62	1.19	1.61	1.80	2.71	1.89	2.17	3.01	3.59
5500				0.51	1.08	1.47	1.64	2.46	1.72	1.97	2.74	3.27

Capacities for softwood

Capacities for hardwood.

Capacities for softwood and hardwood.

Notes:

1. Refer to General Notes for Capacity Table notes.
2. Refer to tables on page 14 for Fastener Specifications.

TOPSPAN® 96

TOPSPAN® 96 is a 96mm deep profile used as a roof purlin or wall girt. It is largely used in the rural market for shed, however has application for residential garages and awnings. It is commonly used in-lieu of the smaller and lighter gauge traditional Cee and Zed purlins, and is conveniently sized to be between the TOPSPAN® 61 and TOPSPAN® 120.

The bottom flanges have two longitudinal stiffeners/grooves for improved performance, but also act as a guide for the correct positioning of the fixing fasteners.

The webs have a single longitudinal stiffener for improved web strength and thus improved profile capacity.

Lapping (structural) is simple and will ensure continuity and straightness and further improve the capacity of the configuration. The lapping results in a precise snug fit without deformation of the profile and only nominal step at the lap.

MATERIAL SPECIFICATIONS

TOPSPAN® 96 light steel sections are made from ZINCALUME® aluminium/zinc alloy coated steel complying with AS 1397 G550, AM125 (550 MPa minimum yield stress, 125g/m^2 minimum coating mass) or AS 1397 G500, AM125 (500 MPa minimum yield stress, 125g/m^2 minimum coating mass).

Base Metal Thickness (mm)	0.75	1.0	1.2
Yield Strength (MPa)	550	550	500
Coating Mass (g/m²)	125	125	125
Mass (kg/m)	1.68	2.22	2.66

MAXIMUM SPAN (MM)

Point Load: 1.4kN (strength criteria only)

Section	TS9675	TS9610	TS9612
Single Span	3000	5000	6500
2-Span Continuous	3300	4500	4500
2/3 Lapped Continuous Span	3500	5800	6800

INWARD CAPACITY

2-Span Lapped - Inward Capacity (kN/m)

	TS9675		TS9610		TS9612	
Span (mm)	**Strength**	**L/150**	**Strength**	**L/150**	**Strength**	**L/150**
3000	2.61	1.77	4.43	2.43	5.19	2.60
3500	2.10	1.38	3.52	1.91	4.19	2.06
4000	1.66	1.05	2.74	1.47	3.32	1.59
4500	1.29	0.77	2.08	1.08	2.59	1.18
5000	0.99	0.54	1.55	0.77	1.99	0.85
5500	0.85	0.43	1.29	0.60	1.67	0.68
6000	0.78	0.37	1.17	0.50	1.49	0.58
6500	0.71	0.31	1.04	0.42	1.31	0.48
7000	0.61	0.26	0.92	0.32	1.12	0.38
7500	0.53	0.20	0.79	0.22	0.94	0.28

3-Span Lapped - Inward Capacity (kN/m)

	TS9675		TS9610		TS9612	
Span (mm)	**Strength**	**L/150**	**Strength**	**L/150**	**Strength**	**L/150**
3000	2.78	1.39	4.19	1.90	5.12	2.04
3500	2.24	1.09	3.37	1.50	4.13	1.61
4000	1.77	0.82	2.66	1.14	3.28	1.25
4500	1.38	0.60	2.06	0.84	2.55	0.93
5000	1.05	0.43	1.56	0.59	1.94	0.67
5500	0.88	0.34	1.30	0.47	1.62	0.53
6000	0.78	0.29	1.15	0.40	1.43	0.46
6500	0.67	0.25	0.99	0.32	1.24	0.38
7000	0.57	0.20	0.84	0.25	1.04	0.30
7500	0.47	0.15	0.69	0.17	0.85	0.22

Notes:

1. Refer to General Notes for Capacity Table notes.

2-Span Continuous - Inward Capacity (kN/m)

	TS9675		TS9610		TS9612	
Span (mm)	**Strength**	**L/150**	**Strength**	**L/150**	**Strength**	**L/150**
3000	1.96	1.70	2.90	1.84	3.16	2.81
3500	1.45	1.24	2.13	1.41	2.34	2.03
4000	1.12	0.94	1.63	1.12	1.80	1.53
4500	0.89	0.73	1.29	0.91	1.43	1.20

Single Span - Inward Capacity (kN/m)

	TS9675		TS9610		TS9612	
Span (mm)	**Strength**	**L/150**	**Strength**	**L/150**	**Strength**	**L/150**
3000	1.78	0.90	2.81	1.21	3.16	1.48
3500	1.44	0.69	2.26	0.95	2.55	1.12
4000	1.15	0.51	1.79	0.72	2.02	0.82
4500	0.90	0.36	1.38	0.53	1.57	0.57
5000	0.69	0.24	1.05	0.37	1.20	0.36
5500	0.58	0.18	0.88	0.29	1.00	0.27
6000	0.51	0.16	0.78	0.23	0.88	0.23
6500	0.44	0.13	0.69	0.18	0.76	0.18
7000			0.59	0.13	0.65	0.14
7500			0.49	0.08	0.53	0.10

OUTWARD CAPACITY

2-Span Lapped - Outward Capacity (kN/m)

Span (mm)	Member Strength (kN/m)			2 Screw Connection Capacity (kN/m)				4 Screw Connection Capacity (kN/m)			
	TS9675	TS9610	TS9612	Support Thickness (mm)				Support Thickness (mm)			
				1	1.2	1.5	1.9	1	1.2	1.5	1.9
3000	2.40	3.83	4.37	0.95	1.24	1.55	2.06	1.34	1.80	2.26	2.71
3500	1.92	3.04	3.53	0.82	1.06	1.33	1.76	1.15	1.54	1.94	2.32
4000	1.51	2.37	2.80	0.71	0.93	1.16	1.54	1.00	1.35	1.69	2.03
4500	1.16	1.80	2.18	0.63	0.83	1.03	1.37	0.89	1.20	1.51	1.80
5000	0.88	1.33	1.66	0.57	0.74	0.93	1.23	0.80	1.08	1.36	1.62
5500	0.74	1.11	1.39	0.52	0.68	0.85	1.12	0.73	0.98	1.23	1.48
6000	0.67	0.99	1.24	0.48	0.62	0.78	1.03	0.67	0.90	1.13	1.35
6500	0.59	0.87	1.08	0.44	0.57	0.72	0.95	0.62	0.83	1.04	1.25
7000	0.52	0.76	0.92	0.41	0.53	0.66	0.88	0.57	0.77	0.97	1.16
7500	0.45	0.64	0.76	0.38	0.50	0.62	0.82	0.53	0.72	0.90	1.08

3-Span Lapped - Outward Capacity (kN/m)

Span (mm)	Member Strength (kN/m)			2 Screw Connection Capacity (kN/m)				4 Screw Connection Capacity (kN/m)			
	TS9675	TS9610	TS9612	Support Thickness (mm)				Support Thickness (mm)			
				1	1.2	1.5	1.9	1	1.2	1.5	1.9
3000	1.78	2.97	3.57	1.10	1.43	1.79	2.37	1.54	2.07	2.60	3.12
3500	1.47	2.44	2.92	0.94	1.22	1.53	2.03	1.32	1.77	2.23	2.67
4000	1.20	1.97	2.36	0.82	1.07	1.34	1.78	1.15	1.55	1.95	2.34
4500	0.97	1.57	1.87	0.73	0.95	1.19	1.58	1.03	1.38	1.73	2.08
5000	0.78	1.24	1.47	0.66	0.86	1.07	1.42	0.92	1.24	1.56	1.87
5500	0.67	1.05	1.24	0.60	0.78	0.97	1.29	0.84	1.13	1.42	1.70
6000	0.60	0.93	1.10	0.55	0.71	0.89	1.19	0.77	1.03	1.30	1.56
6500	0.53	0.80	0.96	0.51	0.66	0.82	1.09	0.71	0.96	1.20	1.44
7000	0.47	0.68	0.81	0.47	0.61	0.77	1.02	0.66	0.89	1.11	1.34
7500	0.40	0.56	0.67	0.44	0.57	0.71	0.95	0.62	0.83	1.04	1.25

2-Span Continuous - Outward Capacity (kN/m)

Span (mm)	Member Strength (kN/m)			2 Screw Connection Capacity (kN/m)				4 Screw Connection Capacity (kN/m)			
	TS9675	TS9610	TS9612	Support Thickness (mm)				Support Thickness (mm)			
				1	1.2	1.5	1.9	1	1.2	1.5	1.9
3000	1.78	2.80	3.15	0.97	1.27	1.58	2.10	1.36	1.83	2.30	2.76
3500	1.31	2.06	2.31	0.83	1.08	1.36	1.80	1.17	1.57	1.97	2.37
4000	1.00	1.58	1.77	0.73	0.95	1.19	1.57	1.02	1.37	1.73	2.07
4500	0.79	1.25	1.40	0.65	0.84	1.05	1.40	0.91	1.22	1.54	1.84

Single Span - Outward Capacity (kN/m)

Span (mm)	Member Strength (kN/m)			2 Screw Connection Capacity (kN/m)				4 Screw Connection Capacity (kN/m)			
	TS9675	TS9610	TS9612	Support Thickness (mm)				Support Thickness (mm)			
				1	1.2	1.5	1.9	1	1.2	1.5	1.9
3000	1.21	1.95	2.09	2.43	3.16	3.95	5.25	3.41	4.58	5.76	6.90
3500	1.01	1.55	1.71	2.08	2.71	3.39	4.50	2.92	3.93	4.94	5.92
4000	0.83	1.20	1.38	1.82	2.37	2.97	3.94	2.56	3.44	4.32	5.18
4500	0.68	0.91	1.09	1.62	2.11	2.64	3.50	2.27	3.05	3.84	4.60
5000	0.55	0.68	0.86	1.46	1.90	2.37	3.15	2.05	2.75	3.46	4.14
5500	0.47	0.57	0.74	1.32	1.73	2.16	2.86	1.86	2.50	3.14	3.76
6000	0.41	0.51	0.66	1.21	1.58	1.98	2.62	1.70	2.29	2.88	3.45
6500		0.45	0.59	1.12	1.46	1.83	2.42	1.57	2.11	2.66	3.19
7000		0.40	0.51	1.04	1.36	1.69	2.25	1.46	1.96	2.47	2.96
7500			0.44	0.97	1.27	1.58	2.10	1.36	1.83	2.30	2.76

Capacities for softwood

Capacities for hardwood.

Capacities for softwood and hardwood.

Notes:

1. Refer to General Notes for Capacity Table notes.
2. Refer to tables on page 14 for Fastener Specifications.

TOPSPAN® 120

TOPSPAN® 120 is a 120mm deep profile used as a roof purlin or wall girt. It is commonly used in the rural, residential and small commercial market for shed, garages and awnings where loner spans or strength is required. It is commonly used in lieu of the smaller and lighter gauge traditional Cee and Zed purlins. It is commonly called a "rural purlin". It's versatility has resulted in applications other than a purlin such as shelving and flooring.

The top flange of the profile has two longitudinal stiffeners/grooves for improved performance. In some applications these grooves are used as a pocket for adhesive/filler layers between the TOPSPAN® and the cladding/liner.

The webs have two longitudinal stiffeners for improved web strength and thus improved profile capacity.

Lapping (structural) is simple and will ensure continuity and straightness and further improve the capacity of the configuration. The lapping results in a precise snug fit without deformation of the profile and only nominal step at the lap.

MAXIMUM SPAN (MM)

Point Load: 1.4kN (strength criteria only)

Section	TS12070	TS12090	TS12010
Single Span	3200	5600	6800
2-Span Continuous	4200	6000	6000
2/3 Lapped Continuous Span	4600	7000	7500

MATERIAL SPECIFICATIONS

TOPSPAN® 120 light steel sections are made from ZINCALUME® aluminium/zinc alloy coated steel complying with AS1397 G550, AM125 (550 MPa minimum yield stress, 125g/m^2 minimum coating mass).

Base Metal Thickness (mm)	0.70	0.90	1.00
Yield Strength (MPa)	550	550	550
Coating Mass (g/m^2)	125	125	125
Mass (kg/m)	2.07	2.64	2.93

INWARD CAPACITY

2-Span Lapped - Inward Capacity (kN/m)

	TS12070		TS12090		TS12010	
Span (mm)	Strength	L/150	Strength	L/150	Strength	L/150
3000	3.31	2.47	5.11	3.26	5.69	3.47
3500	2.62	1.98	4.08	2.61	4.56	2.80
4000	2.03	1.56	3.19	2.06	3.59	2.23
4500	1.53	1.21	2.44	1.57	2.76	1.72
5000	1.13	0.91	1.83	1.19	2.09	1.31
5500	0.95	0.75	1.52	0.97	1.74	1.08
6000	0.86	0.65	1.35	0.83	1.54	0.92
6500	0.78	0.55	1.18	0.70	1.35	0.77
7000	0.69	0.46	1.01	0.56	1.15	0.61
7500	0.61	0.36	0.84	0.44	0.95	0.47

3-Span Lapped - Inward Capacity (kN/m)

	TS12070		TS12090		TS12010	
Span (mm)	Strength	L/150	Strength	L/150	Strength	L/150
3000	3.33	1.94	5.11	2.56	5.75	2.73
3500	2.68	1.56	4.13	2.06	4.68	2.21
4000	2.19	1.24	3.28	1.61	3.74	1.75
4500	1.63	0.96	2.56	1.24	2.94	1.36
5000	1.23	0.72	1.95	0.93	2.20	1.03
5500	1.03	0.59	1.63	0.76	1.89	0.85
6000	0.91	0.51	1.43	0.65	1.65	0.73
6500	0.78	0.44	1.22	0.54	1.41	0.60
7000	0.66	0.36	1.02	0.45	1.16	0.49
7500	0.54	0.28	0.82	0.34	0.92	0.37

Notes:
1. Refer to General Notes for Capacity Table notes.

2-Span Continuous - Inward Capacity (kN/m)

	TS12070		TS12090		TS12010	
Span (mm)	Strength	L/150	Strength	L/150	Strength	L/150
3000	2.26	1.96	3.93	2.66	4.81	2.77
3500	1.72	1.49	2.94	2.02	3.53	2.11
4000	1.36	1.19	2.28	1.58	2.70	1.66
4500	1.11	0.97	1.83	1.29	2.14	1.35
5000	0.92	0.80	1.50	1.06	1.73	1.12

Single Span - Inward Capacity (kN/m)

	TS12070		TS12090		TS12010	
Span (mm)	Strength	L/150	Strength	L/150	Strength	L/150
3000	2.17	1.68	3.48	2.18	4.14	2.38
3500	1.74	1.30	2.79	1.67	3.32	1.82
4000	1.37	0.96	2.20	1.24	2.61	1.34
4500	1.05	0.67	1.71	0.87	2.00	0.94
5000	0.80	0.46	1.30	0.58	1.51	0.62
5500	0.67	0.35	1.11	0.45	1.27	0.48
6000	0.60	0.30	1.01	0.38	1.13	0.41
6500	0.53	0.25	0.90	0.31	1.00	0.34
7000	0.47	0.20	0.80	0.25	0.86	0.28
7500	0.40	0.15	0.70	0.18	0.73	0.21

OUTWARD CAPACITY

2-Span Lapped - Outward Capacity (kN/m)

Span (mm)	Member Strength (kN/m)			2 Screw Connection Capacity (kN/m)				4 Screw Connection Capacity (kN/m)			
	TS12070	TS12090	TS12010	Support Thickness (mm)				Support Thickness (mm)			
				1	1.2	1.5	1.9	1	1.2	1.5	1.9
3000	3.37	4.71	5.59	0.95	1.24	1.55	2.06	1.34	1.80	2.26	2.71
3500	2.67	3.75	4.46	0.82	1.06	1.33	1.76	1.15	1.54	1.94	2.32
4000	2.08	2.93	3.48	0.71	0.93	1.16	1.54	1.00	1.35	1.69	2.03
4500	1.57	2.24	2.66	0.63	0.83	1.03	1.37	0.89	1.20	1.51	1.80
5000	1.17	1.68	2.00	0.57	0.74	0.93	1.23	0.80	1.08	1.36	1.62
5500	0.97	1.42	1.68	0.52	0.68	0.85	1.12	0.73	0.98	1.23	1.48
6000	0.87	1.29	1.53	0.48	0.62	0.78	1.03	0.67	0.90	1.13	1.35
6500	0.77	1.17	1.37	0.44	0.57	0.72	0.95	0.62	0.83	1.04	1.25
7000	0.67	1.04	1.21	0.41	0.53	0.66	0.88	0.57	0.77	0.97	1.16
7500	0.57	0.91	1.05	0.38	0.50	0.62	0.82	0.53	0.72	0.90	1.08

3-Span Lapped - Outward Capacity (kN/m)

Span (mm)	Member Strength (kN/m)			2 Screw Connection Capacity (kN/m)				4 Screw Connection Capacity (kN/m)			
	TS12070	TS12090	TS12010	Support Thickness (mm)				Support Thickness (mm)			
				1	1.2	1.5	1.9	1	1.2	1.5	1.9
3000	3.07	4.46	4.80	1.10	1.43	1.79	2.37	1.54	2.07	2.60	3.12
3500	2.39	3.63	3.89	0.94	1.22	1.53	2.03	1.32	1.77	2.23	2.67
4000	1.81	2.91	3.10	0.82	1.07	1.34	1.78	1.15	1.55	1.95	2.34
4500	1.33	2.29	2.43	0.73	0.95	1.19	1.58	1.03	1.38	1.73	2.08
5000	0.95	1.78	1.88	0.66	0.86	1.07	1.42	0.92	1.24	1.56	1.87
5500	0.78	1.49	1.59	0.60	0.78	0.97	1.29	0.84	1.13	1.42	1.70
6000	0.71	1.32	1.42	0.55	0.71	0.89	1.19	0.77	1.03	1.30	1.56
6500	0.63	1.14	1.25	0.51	0.66	0.82	1.09	0.71	0.96	1.20	1.44
7000	0.56	0.97	1.09	0.47	0.61	0.77	1.02	0.66	0.89	1.11	1.34
7500	0.49	0.79	0.92	0.44	0.57	0.71	0.95	0.62	0.83	1.04	1.25

2-Span Continuous - Outward Capacity (kN/m)

Span (mm)	Member Strength (kN/m)			2 Screw Connection Capacity (kN/m)				4 Screw Connection Capacity (kN/m)			
	TS12070	TS12090	TS12010	Support Thickness (mm)				Support Thickness (mm)			
				1	1.2	1.5	1.9	1	1.2	1.5	1.9
3000	2.41	4.34	5.32	0.97	1.27	1.58	2.10	1.36	1.83	2.30	2.76
3500	1.86	3.03	3.77	0.83	1.08	1.36	1.80	1.17	1.57	1.97	2.37
4000	1.49	2.23	2.80	0.73	0.95	1.19	1.57	1.02	1.37	1.73	2.07
4500	1.22	1.69	2.15	0.65	0.84	1.05	1.40	0.91	1.22	1.54	1.84
5000	1.03	1.33	1.70	0.58	0.76	0.95	1.26	0.82	1.10	1.38	1.66

Single Span - Outward Capacity (kN/m)

Span (mm)	Member Strength (kN/m)			2 Screw Connection Capacity (kN/m)				4 Screw Connection Capacity (kN/m)			
	TS12070	TS12090	TS12010	Support Thickness (mm)				Support Thickness (mm)			
				1	1.2	1.5	1.9	1	1.2	1.5	1.9
3000	1.38	2.71	3.23	2.43	3.16	3.95	5.25	3.41	4.58	5.76	6.90
3500	1.15	2.15	2.57	2.08	2.71	3.39	4.50	2.92	3.93	4.94	5.92
4000	0.94	1.67	2.00	1.82	2.37	2.97	3.94	2.56	3.44	4.32	5.18
4500	0.77	1.26	1.52	1.62	2.11	2.64	3.50	2.27	3.05	3.84	4.60
5000	0.62	0.94	1.13	1.46	1.90	2.37	3.15	2.05	2.75	3.46	4.14
5500	0.53	0.79	0.94	1.32	1.73	2.16	2.86	1.86	2.50	3.14	3.76
6000	0.48	0.71	0.85	1.21	1.58	1.98	2.62	1.70	2.29	2.88	3.45
6500	0.42	0.64	0.76	1.12	1.46	1.83	2.42	1.57	2.11	2.66	3.19
7000		0.56	0.66	1.04	1.36	1.69	2.25	1.46	1.96	2.47	2.96
7500		0.49	0.57	0.97	1.27	1.58	2.10	1.36	1.83	2.30	2.76

Capacities for softwood

Capacities for hardwood.

Capacities for softwood and hardwood.

Notes:

1. Refer to General Notes for Capacity Table notes.
2. Refer to tables on page 14 for Fastener Specifications.

SECTION PROPERTIES

TOPSPAN® PROFILE DIMENSIONS

All dimensions are nominal (mm)

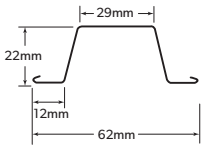

TOPSPAN® 22

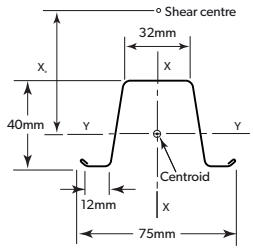

TOPSPAN® 40

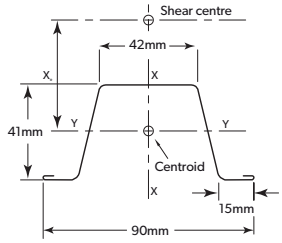

TOPSPAN® 40 (VIC.)

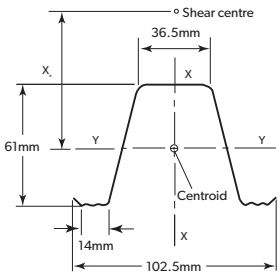

TOPSPAN® 61

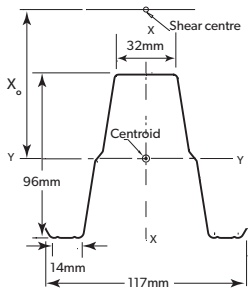

TOPSPAN® 96

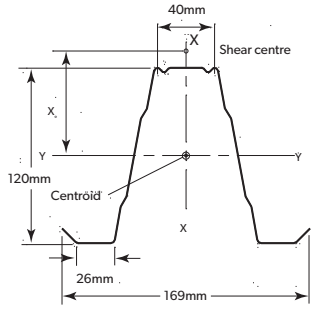

TOPSPAN® 120

SECTION PROPERTIES

TOPSPAN® 40

Product	BMT	Area	Mass per Unit Length	Second Moment of Area (Full)		Shear Centre to centroid distance	Section Modulus (Full)		Radius of Gyration		Torision Constant	Warping Constant	Mono-symmetry Constant
	t mm	A mm^2	kg/m	I_x 10^6mm^4	I_y 10^6mm^4	X_o mm	Z_x 10^3mm^3	Z_y 10^3mm^3	r_x mm	r_y mm	J mm^4	I_w 10^6mm^6	$ß_y$ mm
TS4048	0.48	76.8	0.60	0.058	0.020	33.34	1.293	0.998	27.3	16.3	5.98	3.407	96.04
TS4055	0.55	83	0.67	0.039	0.020	31.84	1.082	0.969	21.87	15.75	8.37	3.418	80.43
TS4075	0.75	113	0.91	0.054	0.028	31.84	1.475	1.322	21.84	15.72	21.23	4.661	80.43

TOPSPAN® 61

Product	BMT	Area	Mass per Unit Length	Second Moment of Area (Full)		Shear Centre to centroid distance	Section Modulus (Full)		Radius of Gyration		Torision Constant	Warping Constant	Mono-symmetry Constant
	t mm	A mm^2	kg/m	I_x 10^6mm^4	I_y 10^6mm^4	X_o mm	Z_x 10^3mm^3	Z_y 10^3mm^3	r_x mm	r_y mm	J mm^4	I_w 10^6mm^6	$ß_y$ mm
TS6160	0.60	117	0.95	0.094	0.059	46.49	1.849	1.976	28.31	22.58	14.08	10.750	115.9
TS6175	0.75	146	1.18	0.117	0.074	46.49	2.312	2.437	28.39	22.63	27.42	13.468	115.9
TS6110	1.00	195	1.56	0.157	0.099	46.49	3.083	3.239	28.37	22.62	65.00	17.957	115.9
TS6112	1.20	234	1.87	0.188	0.119	46.49	3.698	3.951	28.32	22.58	112.70	21.500	115.9

TOPSPAN® 96

Product	BMT	Area	Mass per Unit Length	Second Moment of Area (Full)		Shear Centre to centroid distance	Section Modulus (Full)		Radius of Gyration		Torision Constant	Warping Constant	Mono-symmetry Constant
	t mm	A mm^2	kg/m	I_x 10^6mm^4	I_y 10^6mm^4	X_o mm	Z_x 10^3mm^3	Z_y 10^3mm^3	r_x mm	r_y mm	J mm^4	I_w 10^6mm^6	$ß_y$ mm
TS9675	0.75	208	1.68	0.205	0.242	71.76	3.533	4.922	31.43	34.19	38.91	55.08	160.6
TS9610	1.00	277	2.22	0.273	0.323	71.76	4.711	6.563	31.43	34.19	92.22	73.44	160.6
TS9612	1.20	322	2.66	0.328	0.388	71.76	5.653	7.875	31.93	34.73	159.4	88.12	160.6

TOPSPAN® 120

Product	BMT	Area	Mass per Unit Length	Second Moment of Area (Full)		Shear Centre to centroid distance	Section Modulus (Full)		Radius of Gyration		Torision Constant	Warping Constant	Mono-symmetry Constant
	t mm	A mm^2	kg/m	I_x 10^6mm^4	I_y 10^6mm^4	X_o mm	Z_x 10^3mm^3	Z_y 10^3mm^3	r_x mm	r_y mm	J mm^4	I_w 10^6mm^6	$ß_y$ mm
TS12070	0.70	255	2.07	0.486	0.491	80.87	5.77	7.64	43.4	43.5	42.26	319.9	187.2
TS12090	0.90	329	2.64	0.630	0.638	80.87	7.48	9.81	43.8	44.1	88.7	422.1	187.4
TS12010	1.00	365	2.93	0.694	0.701	80.87	8.25	10.92	43.6	43.3	123.2	457.0	187.2

Note: For TOPSPAN® 22 Section Properties, contact your nearest Service Centre for advice.

FIXING DETAILS

Two Screw Connection

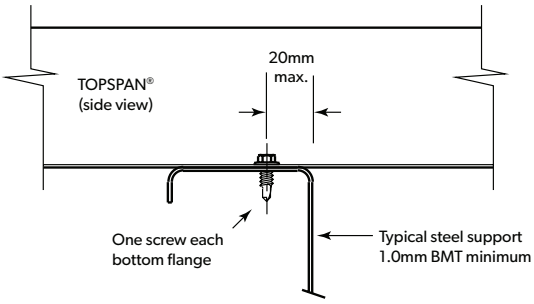

Four Screw Connection

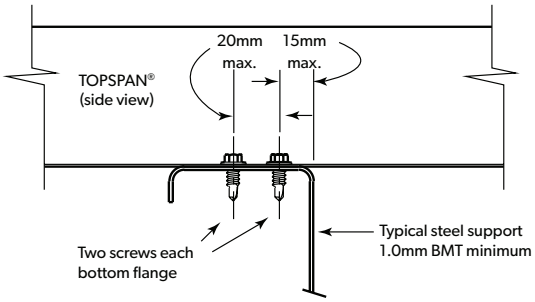

Typical Structural Lap for TOPSPAN® 61

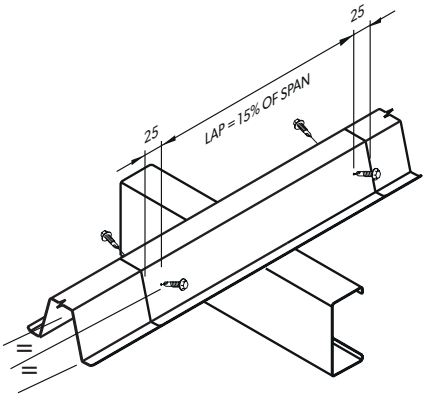

Typical Structural Lap TOPSPAN® 96/120

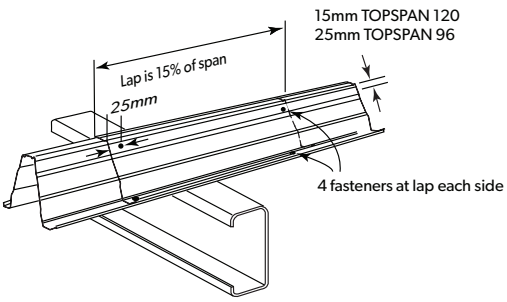

Typical Non-structural Lap for TOPSPAN® 22 & 40

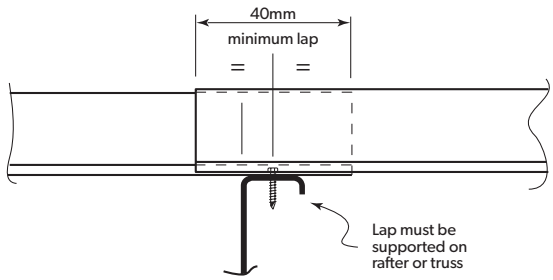

Two Screw Connection (timber)

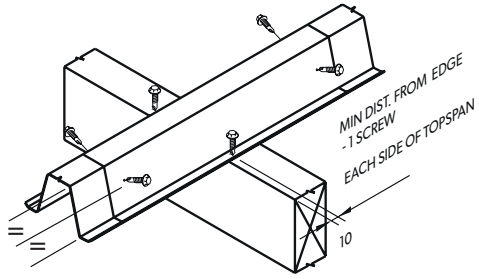

Four Screw Connection (Timber)

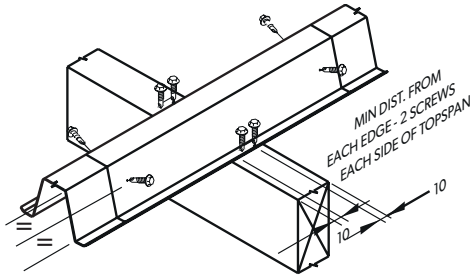

Fastener location

Fastener location-screws must be located in the mid-region of the flat portion of both flanges

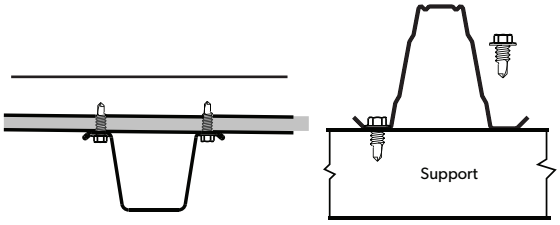

End Support

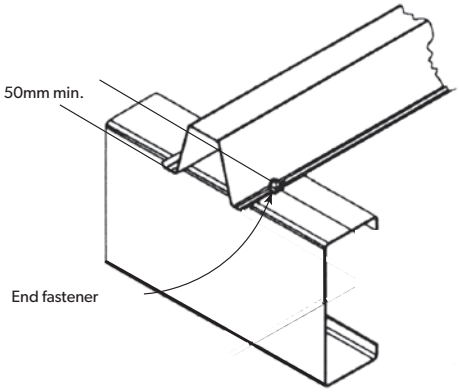

FASTENER SPECIFICATION

FASTENERS: SCREW TO STEEL SUPPORT

TOPSPAN®	Steel Support Thickness (mm) & Grade (MPa)				
	0.75 (G550)	1.0 (G550)	1.2 (G500)	1.5 (G450)	1.9 (G450)
TS2242	#10-16x16 HH	#10-16x16 HH			
TS4048, TS4055, TS4075	#10-16x16 HH	#10-16x16 HH	#12-14x20 HH	#12-14 x20 HH	
TS6160, TS6175, TS6110, TS6112		#12-14x20 HH	#12-14x20 HH	#12-14x20 HH	#12-14x20 HH
TS9675, TS9610, TS9612		M6.5-12x30 HH	#14-10x25 HH	#14-10x25 HH	#14-10x25 HH
TS12070, TS12090, TS12010		M6.5-12x30 HH	#14-10x25 HH	#14-10x25 HH	#14-10x25 HH

Notes:
1. The drill point shall be "self drilling" for metal.
2. HH=Hex. Head.
3. Selection on these pages is an indicative but not comprehensive selection.

FASTENERS: SCREW TO TIMBER SUPPORT

All TOPSPAN® Sizes	
Hardwood	**Softwood**
M5.5-11x40 BATTENZIPS	M5.5-11x40 BATTENZIPS
	M6-11x25 ROOFZIPS

Notes:
1. The drill point shall be suitable for timber fixing.
2. Selection on these pages is an indicative but not comprehensive selection.
3. Fasteners must be fully embedded into timber support.
4. Fasteners must not protrude through the timber.

STRUCTURAL LAPS

For TOPSPAN® 61 #12-14x20 HH

For TOPSPAN® 96 & 120 - #14-10x25 HH

GENERAL INFORMATION AND INSTALLATION MATTERS

CAPACITY TABLE NOTES

1. The values given in the capacity tables are based on the single top flange being restrained by screw fixed cladding (or ceiling liner with respect to the TOPSPAN® 22).
2. For Outward capacity the minimum value of the Member Strength and the Connection Capacity shall be used.
3. In roof applications the maximum span (based on Point Load) should not be exceeded where incidental roof traffic is expected.
4. Interpolation of capacity values in the tables is permitted.
5. For lapped configuration a structural lap of 15% has been used (refer to drawings on page 13).
6. Deflection criteria used is as follows:
   a. TOPSPAN® 22 - L/500 suitable criteria commonly used for ceiling board requirements
   b. TOPSPAN® 40 – L/300 suitable criteria commonly used for domestic tile and steel roof requirements
   c. TOPSPAN® 61, 96 & 120 – L/150 suitable criteria commonly used for structural steel roof requirements
7. The values given in the capacity tables have been limited based on the following:
   a. The maximum and minimum span tested
   b. The maximum available length of the TOPSPAN® profile
   c. Member (profile) Strength capacity less than 0.4kN/m.
8. Point load tests were conducted on TOPSPAN® profiles positioned on a 15° slope for TOPSPAN® 61 and upwards, 25° for TOPSPAN® 40.

LOADING /LOAD TYPE & POSITION:

Loads are either Uniformly Distributed Loads (UDL) acting over the whole length of the TOPSPAN® configuration, or a concentrated load acting at a critical location on the TOPSPAN® configuration, or a combination of both.

Loads are assumed to be acting on the top flange of the TOPSPAN® via the cladding/lining. The top flange of the TOPSPAN® is defined as the wider flange connecting the two webs of the TOPSPAN®.

Typical TOPSPAN® Definitions

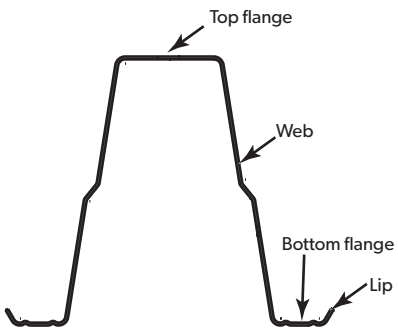

LOAD DIRECTION

The Uniformly Distributed Loads (UDLs) are assumed to be acting in the Outward or Inward direction and perpendicular to the top flange of the TOPSPAN®. Outward Load is defined as the load to pull the cladding/lining off the top flange. Inward Load is defined as the load pushing the cladding/lining onto the top flange. Concentrated loads are assumed to be acting in the Inward direction only.

Loading Conditions

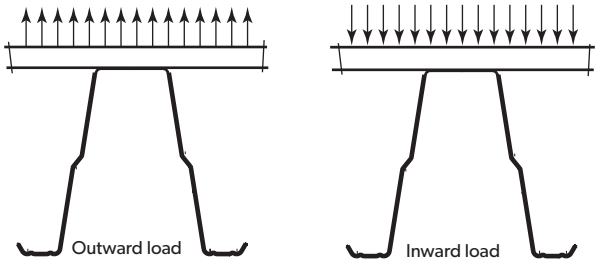

CLADDINGS & LINING:

Claddings and linings can be of numerous materials and profiles. All cladding/linings is assumed to be fixed to the top flange of the TOPSPAN®. It is assumed that the claddings/linings provide restraint to the TOPSPAN® profile and thus must be adequately rigid and stitch together to provide a diaphragm action.

The Lysaght range of roofing and walling profiles that are suitable are CUSTOM ORB®, CUSTOM BLUE ORB®, SPANDEK®, TRIMDEK®, TRIMWALL® and WALLCLAD®.

TILE ROOFING (TOPSPAN® 40 PROFILE ONLY:

The UDLs and concentrated loads are assumed to be acting via the tiles. All tiles are assumed to be securely fixed to the TOPSPAN® by ties or clips. The UDLs and the concentrated loads are assumed to be acting in the Inward direction only and at a maximum angle of 25° from the perpendicular to the top flange of the TOPSPAN®.

LOADING DURING INSTALLATION:

During installation of the TOPSPAN® profile and during the installation of the cladding, lining or tiles, care must be exercised to ensure damage of the TOPSPAN® profile or its connections do not occur.

The single lengths of the TOPSPAN® profiles are not designed to be walked upon. Access to the roof should be when the roof cladding is installed and also when the spans of the TOPSPAN® are limited to the maximum recommended span.

Where installation on roofs, or at height, is necessary care must be exercised in fall prevention.

Foot loading on a TOPSPAN® in a wall application is not recommended.

Foot loading on a TOPSPAN® in a ceiling application is not recommended.

Foot loading on ceiling lining adjacent to the TOPSPAN® is not recommended.

Spread of TOPSPAN® During Incorrect Installation.

DURING THE INSTALLATION OF THE TOPSPAN® PROFILE AND PRIOR TO INSTALLATION OF THE CLADDING/LINING

The installer's weight (or applied pressure in a wall/ceiling application) should be largely applied to the support rather than the TOPSPAN® profile. Any applied load must be light only and care should be exercise to prevent spread of the profile during the fixing of the TOPSPAN® to the support.

Full body load should not be applied unless the TOPSPAN® is adequately fixed to the support. Full body load should only be applied to the TOPSPAN® profile at the support line.

DURING THE INSTALLATION OF THE CLADDING/LINING

Each cladding/lining sheet must be laid and fully fixed to the TOPSPAN® prior to the installation of the next sheet. The installation of the cladding/lining must commence from the line of the support and progress towards the next support line. The cladding/lining is to be used as a rigid platform/diaphragm to keep the TOPSPAN® in alignment and prevent rotation.

The installer's weight (or pressure in a wall/ceiling application) should be largely applied to the cladding/lining to allow distribution of the load to adjacent TOPSPAN®.

DURING THE INSTALLATION OF THE TILES (TOPSPAN® 40 PROFILES ONLY)

Tile stacks must be at the support lines. During the positioning of the tile stacks the installers must walk along the support lines.

During the laying of the tiles each line/layer of tiles must be laid and fully secured to the TOPSPAN® prior to the installation of the next line/layer. The installation of the tiles must commence from the line of the support and progress towards the next support line.

The installer's weight (and load of tiles) should be largely applied to the previously laid tiles to allow distribution of the load to adjacent TOPSPAN®.

TOPSPAN® FIXING & CONSTRUCTION DETAILS

FASTENER POSITIONING

Only the fasteners recommended in this publication are to be used for the fixing of the TOPSPAN® profiles.

The TOPSPAN® profiles must be fixed to the supporting structure using a minimum of two fasteners per support - one fastener either side of the TOPSPAN®, into the bottom flanges. Where a situation requires four fasteners per support then these fasteners are to be equally positioned. The fasteners must be practically perpendicular to the face of the bottom flange and located in the central region of the flange. These fasteners are to be reasonably aligned —> not off-set with each other. (Refer to page 13 - Fixing Details).

The minimum clearance from the end of a length of a TOPSPAN® is to be:

- 20mm for fixing to supports (including end of a non-structural lap) for TOPSPAN® 22 & 40, 50mm minimum for TOPSPAN® 61 and upwards.
- 25mm for structural laps.

Right and Wrong Fixing

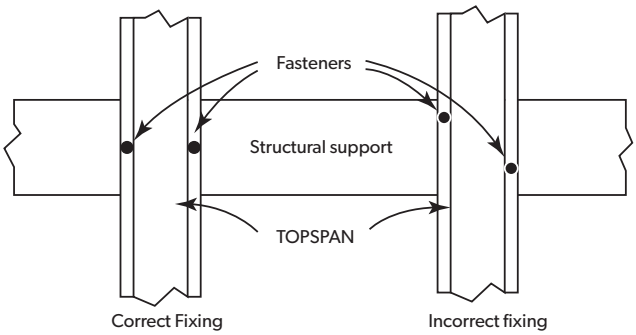

LAPPING

End lapping of the TOPSPAN® is a common and accepted practice. There are two types of laps -Structural and Non-Structural (refer to Fixing Details).

Structural Lap is where the lap length is sufficiently long and the lapping TOPSPAN®s are also stitched together at the ends of the lap – in the bottom flanges and/or the webs. The lap length is at least 15% of the adjacent span. The top flanges are stitched together by the cladding or lining fasteners. This lapping detail is required to ensure continuity and thus increased strength or spanning performance.

Non-Structural Lap is a nominal length of 40mm to simplify the installation detailing. There is no stitching together at the ends of the lap. This lap does not provide continuity.

Typical Structural Lap

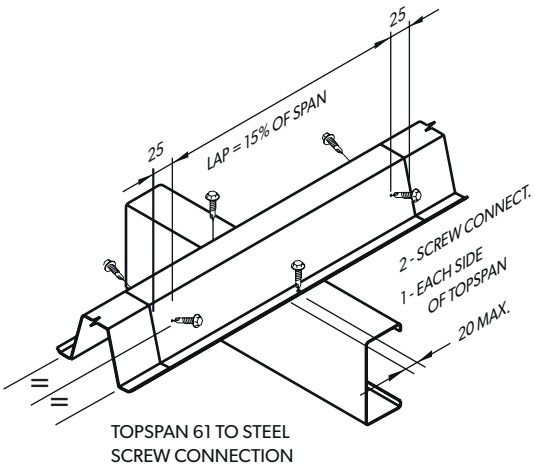

Non-structural Lap

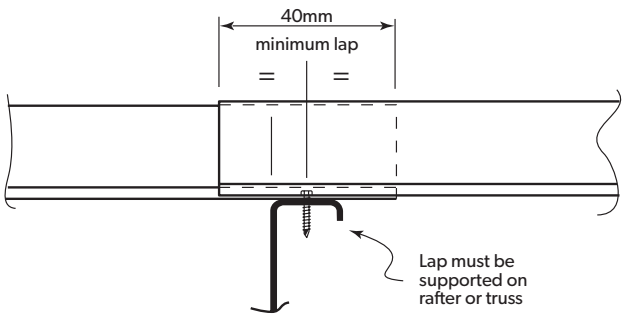

SUPPORT CONSIDERATIONS

The support conditions can impact on the performance of the TOPSPAN® profiles. Poor support conditions can markedly reduce the capacity of the TOPSPAN®. The support conditions that should be considered are: support bearing width; support squareness; support alignment.

TOPSPAN® must sit uniformly onto the supports to ensure reasonable distribution of loads through the webs of the TOPSPAN®. Poor sitting can result in a reduced capacity.

Poor support squareness will result in a local pivot point that has the effect of reducing the bearing width and potential levering action resulting from poor screw position and thus creasing of the web, bottom flanges and lips of the TOPSPAN® profile.

Poor support alignment can result in a curvature along the length of the TOPSPAN®. Not only can this be aesthetically poor but also added induced stresses can reduce the capacity of the TOPSPAN®.

Poor support conditions (flange not sitting flat).

CLADDING/LINING FIXING DETAILS:

Cladding and linings must be fixed to the top flange of the TOPSPAN® profile using the recommended fasteners specified for the cladding or lining.

The fastener must be practically perpendicular to the face of the flange and located in the central region of the flange.

Eccentrically positioned, or non-perpendicular, fasteners can result in non-symmetric loading of the TOPSPAN® which can reduce the capacity.

DESIGN CONSTRUCTION VARIATIONS

Variation of the above design and construction details should be avoided. Lysaght do not have any guidance on capacity for variations from the documented recommendations. If variations cannot be avoided then independent engineering advise should be sought.

HANGING LOADS

TOPSPAN® profiles are not suitable for hanging loads.

If hanging loads cannot be avoided then these loads should be minimised in size and quantity. These loads should be such to avoid/minimise the possibility of profile, web or flange deformation or rotation. These loads should be perpendicular to the top flange, hanging from the lips or webs to be avoided.

HOLING OF THE TOPSPAN®

TOPSPAN® profiles, other than for the recommended screw fixing or lapping of the TOPSPAN® or the cladding/lining to the TOPSPAN®, are not suitable for holing.

If holing cannot be avoided then these holes should be minimised in size and quantity. These loads should be such to avoid/minimise the possibility of profile, web or flange deformation or rotation, and the inclusion of stiffening elements to the TOPSPAN® should be considered.

OVERHANG OF THE TOPSPAN®

Apart from the nominal overhang resulting from the minimum end clearance at supports, no overhang is recommended.

If overhangs cannot be avoided then the overhang should be minimised and the inclusion of stiffening elements to the TOPSPAN®, and at the end of the overhang, should be considered.

Images of Right and Wrong Fixing

Correct

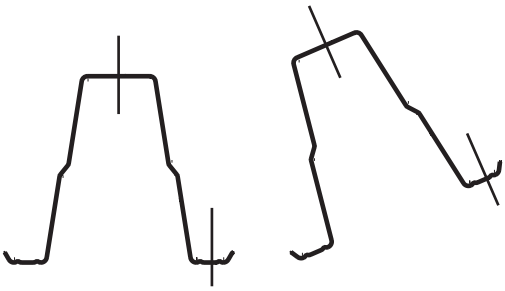

(perpendicular to flange)

Incorrect

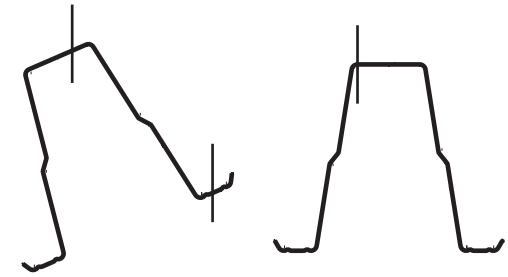

(not perpendicular to flange) (not centred on flange)

STORAGE AND HANDLING

TRANSPORT AND STORAGE

TOPSPAN® battens nest together for easy transport and storage. Store TOPSPAN® in bundles, preferably indoors. If this is not possible, store off the ground, allow to drain properly and cover from the weather.

STORING ON-SITE

TOPSPAN® battens are delivered in strapped bundles. If not required for immediate use, the bundles should be neatly stacked clear of the ground. When stacked they should be allowed to drain, should wetting occur.

The bundles should not be exposed in the open for extended periods. If unavoidable, protect from rain and moisture with waterproof covers.

Lysaght accessories are delivered in strapped or wired bundles, bags, or packages as appropriate.

CUTTING

Cut TOPSPAN® using a non-abrasive disc or metal cutting blade. Swarf and burred edges should be cleaned off on completion of cutting.

ADVERSE CONDITIONS

ZINCALUME® steel is suitable for most exposure conditions. Consult your local sales office for advice.

REFERENCE DOCUMENTS

ROOFING & WALLING MANUAL

Provides guidance on how to use LYSAGHT® claddings in roofing & walling applications in non cyclonic areas.

The publication also contains information on rainwater goods, flashings and cappings.

SUPAPURLINS

SupaZeds & SupaCees used as purlins and girts.

The publication contains design tables, information on bridging and other issues.

CYCLONIC AREA DESIGN MANUAL

Provides guidance on how to use LYSAGHT® claddings in roofing & walling applications in cyclonic areas.

The publication contains design tables for claddings and TOPSPAN® steel sections.

ZEDS & CEES

Standard Zeds & Cees used as purlins and girts.

The publication contains design tables, information on bridging and other issues.

PRODUCT DESCRIPTIONS

- All descriptions, specifications, illustrations, drawings, data, dimensions and weights contained in this catalogue, all technical literature and websites containing information from Lysaght are approximations only. They are intended by Lysaght to be a general description for information and identification purposes and do not create a sale by description. Lysaght reserves the right at any time to:

  (a) supply Goods with such minor modifications from its drawings and specifications as it sees fit; and
  (b) alter specifications shown in its promotional literature to reflect changes made after the date of such publication.

DISCLAIMER, WARRANTIES AND LIMITATION OF LIABILITY

- This publication is intended to be an aid for all trades and professionals involved with specifying and installing Lysaght products and not to be a substitute for professional judgement.
- Terms and conditions of sale available at local Lysaght sales offices.
- Except to the extent to which liability may not lawfully be excluded or limited, BlueScope Steel Limited will not be under or incur any liability to you for any direct or indirect loss or damage (including, without limitation, consequential loss or damage such as loss of profit or anticipated profit, loss of use, damage to goodwill and loss due to delay) however caused (including, without limitation, breach of contract, negligence and/or breach of statute), which you may suffer or incur in connection with this publication.

© Copyright BlueScope Steel Limited 8 May, 2018

WWW.LYSAGHT.COM

Technical enquiries:
steeldirect@bluescopesteel.com or call 1800 641 417

LYSAGHT®, TOPSPAN®, ZINCALUME®, TRUCORE® and ® product names are registered trademarks of BlueScope Steel Limited, ABN 16 000 011 058. The LYSAGHT® range of products is exclusively made by or for BlueScope Steel Limited trading as Lysaght.

9 320075 087739

BLUESCOPE

LYT0019 08.05.18